# Development of Knowledge Based Smart Home

Chukwunazo J. Ezeofor, Onengiye M. Georgewill

**Abstract**— this paper presents the development of Knowledge Based Smart Home. Smart home came to existence the very moment Internet of Things (IoT) Technology was invented. Internet of Things (IoT) has been experimentally proven to work satisfactorily by connecting simple appliances to it and were successfully controlled remotely through the internet.This invention has led to automation of homes, offices, industries, robotics, artificial intelligence etc. and today, more robust systems are being developed. Two basic ways of controlling and monitoring home remotely had been implemented from research. The first is by using GSM phone to control home appliances via sms commands and the second is through web application platform via networked and internet based computers. This work covers both ways and integrated voice recognition as another way of controlling home appliances. In order to accommodate sms based, web based and voice based, knowledge based system is implemented.This system integrates various communication techonologies such as Bluetooth BLE, Wi-Fi, GSM and Voice Recognition for easy communication with smart devices like Android smartphones, tablets, PDA etc. and personal computers. The system is made up of security system, control system and communication system which houses various sensors, actuators, microcontrollers such as raspberry pi 3, ESp 32, STM32, ESP8266-01, LCDs, etc. The graphical user interface (GUI) for mobile and computer web applications is designed using Eclipse and brackets IDEs. Python, java, C++ languages are used to write control codes for both the GUI and the embedded system chips (microcontrollers).The system can also function as an intelligent personal assistant (IPA), thus answering query and performing actions via voice commands using natural language user interface. This is to assist people like elderly, sick and disabled with basic tasks to makes household decisions through stored information in the knowledge base of the system. The system is implemented with the aid of Artificial Intelligence for the effective and efficient management of the home. The complete system was tested successfully.

**Index Terms**— IoT, Knowledge Based, Intelligent system, Eclipse and Brackets IDEs, C++ Language

## 1 Introduction

Smart home is a building with electronic equipment which can be remotely controlled from any location in the world via Smart Devices. This technology became possible due to the invention of Internet of Things (IoT) that enables all the devices on the network to be addressed separately via internet protocol (IP). Smart home provides homeowners security, comfort, convenience, energy efficiency and enhance intelligent living by allowing them remotely control and operate home devices through application installed in their smartphone or other networked devices. As part of the internet of things (IoT), smart home systems and devices often operate together, sharing consumer usage data among themselves and automating actions based on the homeowners' preferences [1]. Devices react to their environments and coordinate with each other and with networked services [2].

Home automation is a recent modified innovation. The homes of today are getting smart enough to automatically decide how appliances would interact or how to adapt to owner's requirements.Throughout history; researchers have endlessly strived to modify tasks within the home in order to make lives easier and better. Many standards and proprietary communications interfaces found on the existing autmated homes such as Wi-Fi, Bluetooth, ZigBee, RFID, Z-Wave etc. are used for connecting things to each other within that home environment or to a cloud.

Smart home system makes intelligent decisions to control a home. It requires minimum human interactions and can perform tasks automatically after it learns patterns. Invention of Fifth generation computing brought about Artificial Intelligence (AI) technology which made it possible for homes, industries, companies, organization etc. to gain automations. AI is used to control the home equipment and other facilities thus reducing human intervention.

## 2 Literature Review

In the present day, researchers and developers had come up with a wide range of Home Automation Systems that are used for remote monitoring, alerting as well as controlling tasks through affordable and easy to implement hardware systems.

A cost-effective wireless home automation system that is based on an open protocol, easy to configure and setup radio frequency identification (RFID) control and secured communication is built in [13] Included in the work is a home automation management console that is controlled from a personal computer, which is both intuitive and appealing to all kinds of home users. He also implemented various intelligent features that made his work stand out among competing solutions such as automation control from smartphones, RFID lighting control and plug and play easy setup.

In [16], the designe and implementation of a low cost Android Mobile Based Home Automation Using Bluetooth was presented. The system was designed to assist and provide support for elderly and disabled at homes. The control system uses wireless Bluetooth technology from PC/laptop or smart of the user (operating at 2.4GHz) to provide remote access to the electrical appliances and devices at home.

Baig et al [6] presented an advanced home automation system using normal web server and Wi-Fi technology. The devices can be switched ON/OFF and sensors can be read through Personal Computer web browser via Wi-Fi. The system can be controlled only by using the device on which the webserver is installed. The webserver was installed in cloud so that the home can be controlled by any device which has a Wi-Fi and a web browser.

Garima et al [11] introduced Artificial Intelligence (AI) in handling home automations. The AI developed does not only

control the appliances but is also used to retrieve information from the Web depending on the query. With this, the living space of the user can be controlled without the touch of a button. Since the system understands the environment of the user, it optimizes the environment when the system is aware of the user's presence and preferences such as energy consumption can be reduced significantly. The system was built using Arduino Due and Raspberry Pi 3 Microcontrollers.

In [14}, Mark Zuckerberg et al built Jarvis as a voice-controlled digital assistant to his house. Jarvis can be controlled via voice using a mobile phone and a computer. it can also be used to controls his home, including lights, temperature, appliances, music and security, that learns his tastes and patterns, that can learn new words and concepts, and that can even entertain his daughter, Max. It uses several artificial intelligence techniques, including natural language processing, speech recognition, face recognition, and reinforcement learning, written in Python, PHP and Objective C. He used internet-connected power switches to control most of the appliances that were not connected to the internet, thus enabling him to turn ON and OFF power remotely. One of the challenges he encountered was simply connecting and communicating with all the different systems in his home.

## 3 SYSTEM DESIGN APPROACH

The knowledge base smart system is splitted into hardware and software.The hardware comprises of the power supply system, communication system, security system and control system integrated together. The software is made up of the Graphicall User Interface (GUI) and microcontroller programming languages.The system breakdown structure diagram is shown in Figure 1.

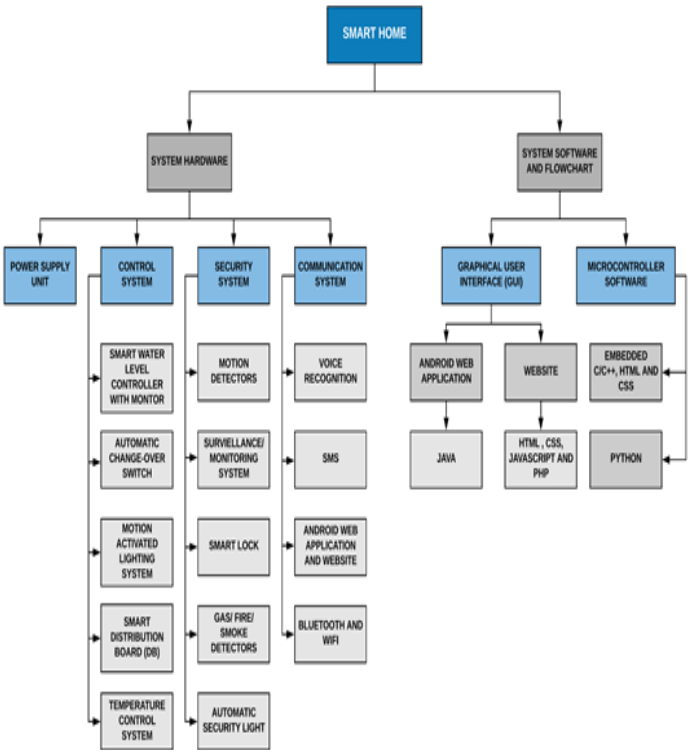


Figure 1: Structure of the Knowledge Base Smart System

### 3.1 Smart Home Hardware

The system hardware and its components as mentioned earlier are described in details in this section.

### 3.1.1 Power Supply Unit

Since the electronic devices used in building the smart home system require +5V DC and +12V DC signals to function, the dual-output linear regulated power supply circuit (figure 2) is designed suitable for the system.

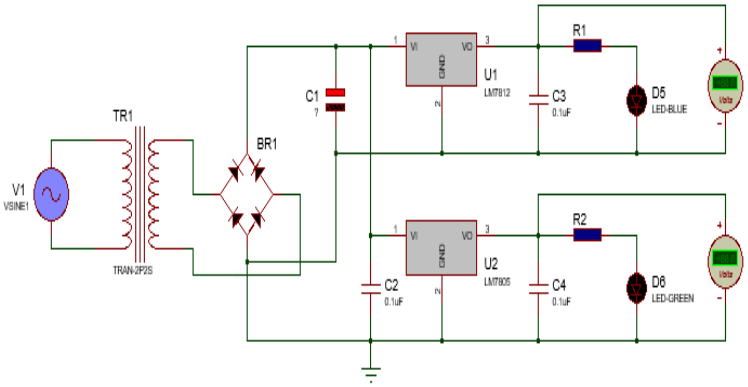


Figure 2: +5V and +12V regulated DC power supply circuit

A transformer receives an alternating current (AC) and steps down the mains voltage AC to a low voltage AC. The bridge rectifier rectifies the AC voltage and then the smoothing capacitor converts the alternating current to unregulated direct current (DC) that allow current to flows in only one direction. Finally, the unregulated DC voltage is passed to the linear voltage regulators for maintaining constant output voltages.

### 3.1.2 Smart home SecuritySystem (SHSS)

This security system includes the Raspberry pi 3, pi camera, STM32F103 ARM Cortex, SIM800L GSM/GPRS module, PIR motion sensor, liquid crystal display, MFRC-522 RFID module, 4x4 matrix keyboard, 2 channel 5V relay module, security light, alarm system, photoresistor, analog gas sensor, BME280 integrated environmental sensor, LM35 centigrade temperature sensor, flame sensor and power supply unit. The figure 3 shows the block diagram of the home security system. All the components within home security system are connected to the raspberry pi and STM32F103 ARM Cortex.

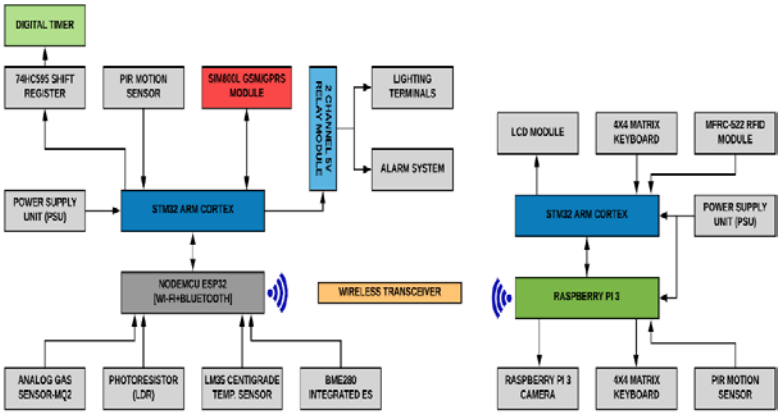


Figure 3: Block Diagram of the Smart Home Security System

The motion sensor is used to detect the presence of intruder in the home. The keypad is used to disarm the security of the system with the help of unique passcode and also for access control. The Radio Frequency Identification (RFID) basically identifys and grants access. The system collects information from the sensors, decides and sends SMS to a corresponding number by using the SIM800L GSM/GPRS module. To communicate with the GSM modem, AT commands are used to automatically receive the call on system from the preconfigured number. The system also sends the message to preconfigured number about the intrusion indication through AT commands. The security system circuit diagram is shown in figure 4.

### A. Smart home SecuritySystem Algorithm & FlowChart

The algorithm used to achieve the home security system is described below and flowchart shown in figure 5

1. Start;
2. Initialize Wi-Fi, Bluetooth BLE, GSM Module, Liquid crystal display, PIR motion sensor, LM35 Centigrade sensor, BME280 Integrated environmental sensor, Buzzer, Emic 2 TTS Module;
3. Receive incoming strings from the communication system;
4. Read all the sensors data;
5. Check if gas is detected. If gas or smoke is not detected, go to step 3. Otherwise, the system will send a notification message to the user;
6. Check if motion is detected. If motion is not detected, go to step 3. Otherwise, the system will turn on the alarming signal and send a notification message to the user;
7. Check if temperature is high. If temperature is not high, go to step 3. Otherwise, the system will turn on the A.C. of Fan connected to the socket outlet and then notify the user;
8. Monitor the incoming commands from the user;
9. Stop

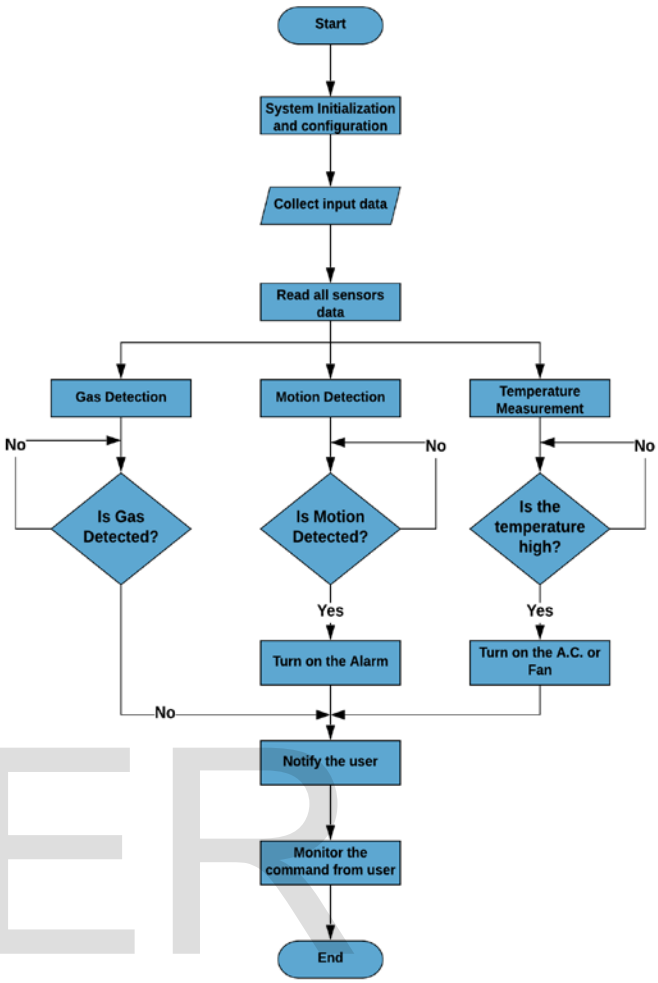


Figure 5: FlowChart of the Smart Home Security System

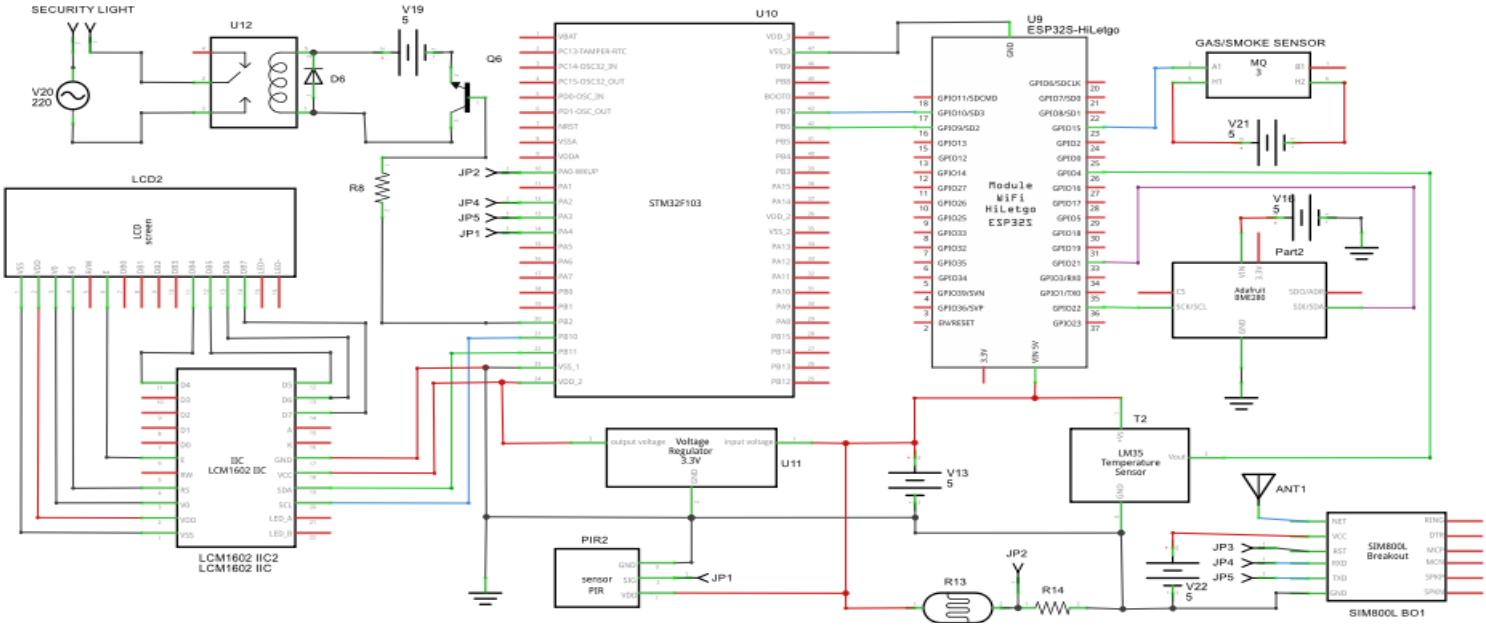


Figure 4: Circuit Diagram of Smart Home Security System

### 3.1.3 Smart home CommunicationSystem (SHCS)

This system integrates lots of wireless technologies such as Wi-Fi, Bluetooth, SMS, Voice Recognition, Android web application etc. to enable it controlled by any smart devices as shown in figure 6. The systems also include a text to speech synthesizer which generates and processes natural language. This gives the system its own vocal and aids communication between the homeowner and the system.

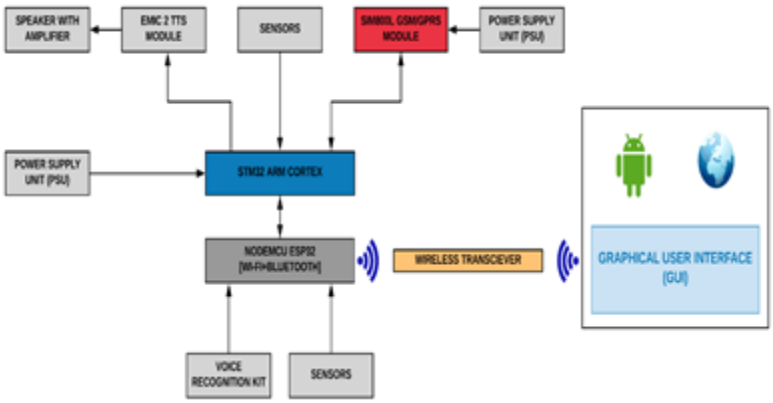


Figure 6: Block diagram of Smart home Communication System

#### A. Communication System Algorithm & FlowChart

The algorithm used to achieve the communication system is shown below with tne flowchart in figure 7

1. Start;
2. Initialize Wi-Fi, Bluetooth BLE, GSM Module, Liquid crystal display, PIR motion sensor, LM35 Centigrade sensor, BME280 Integrated environmental sensor, Buzzer, Emic 2 TTS Module;
3. Monitor the GSM Module to know if SMS has been received. If SMS is received, process the SMS else go to step 3;
4. Switch on the Bluetooth of the connecting device and pair with the system;
5. Connect to the paired slave Bluetooth Module in the mobile application;
6. Check if the Bluetooth is connected. If Bluetooth status is not connected, go to step 5. Otherwise send the command to the system;
7. Turn on the hotspot of the connecting device;
8. Verify if SSID and Password is stored. If the SSID and Password are stored, go to step 11. Otherwise go to step 9.
9. Create an Access Point and start web server;
10. Check if SSID and Password is filled in. If SSID and Password are filled in, save them else go to step 9;
11. Connect to WLAN;
12. Check if connection has been established. If connection is established, process incoming strings. Otherwise, go to step 9;
13. Stop;

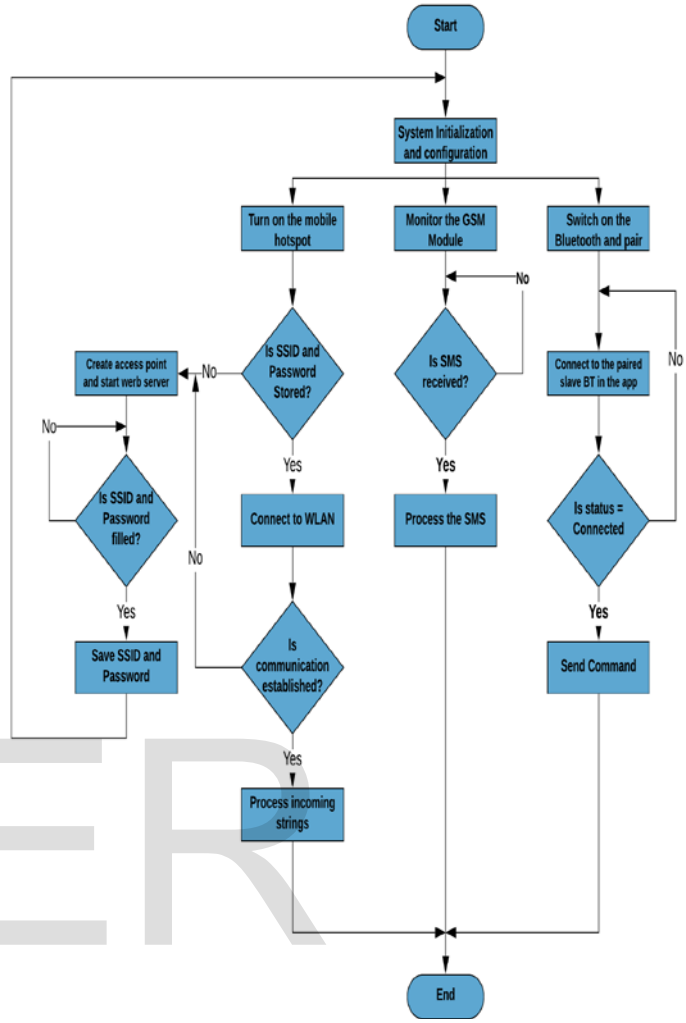


Figure 7: FlowChart of the Communication System

### 3.1.4 Smart home ControlSystem

Control system section comprises of several subsections such as:

- water level control and wireless notification system through Web interface and GSM technology,
- Monitoring and remote controlling of home appliances via voice recognition, web interface, android application interface, Wi-Fi, Bluetooth etc.
- Home weather station with A.C. temperature control,
- Automatic change-over switch control.

It ensures that all the subsections highlighted are properly monitored, controlled and managed. The block diagram of the control system is shown in figure 8.

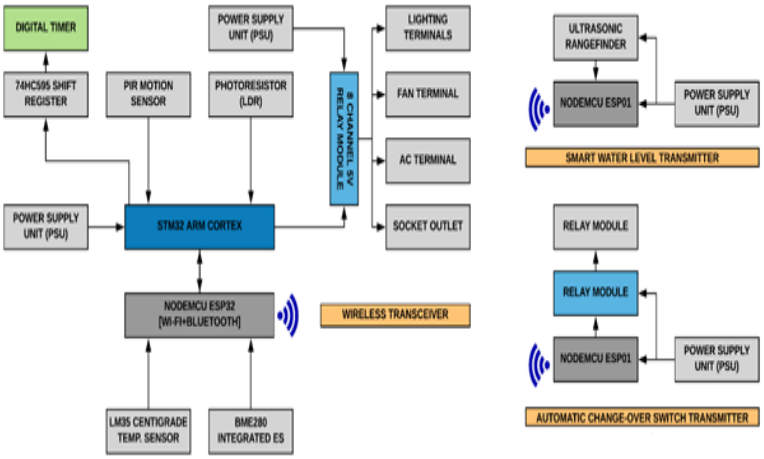


Figure 8: Control System block diagram for Smart Home

### A. Control System Algorithm & FlowChart

The algorithm used to achieve the control system is described below and flowchart shown in figure 9

1. Start;
2. Initialize Wi-Fi, Bluetooth BLE, GSM Module, Liquid crystal display, PIR motion sensor, LM35 Centigrade sensor, BME280 Integrated environmental sensor, Buzzer, Emic 2 TTS Module;
3. Receive incoming strings from the communication systems;
4. Read all the incoming strings (command);
5. Check if the command received is recognised by the system. If recognised go to step else go to step 3;
6. Execute all the commands recognised. All the instructions are performed by the system;
7. Output voice notification and print the current status of the system to the LCD;
8. End;

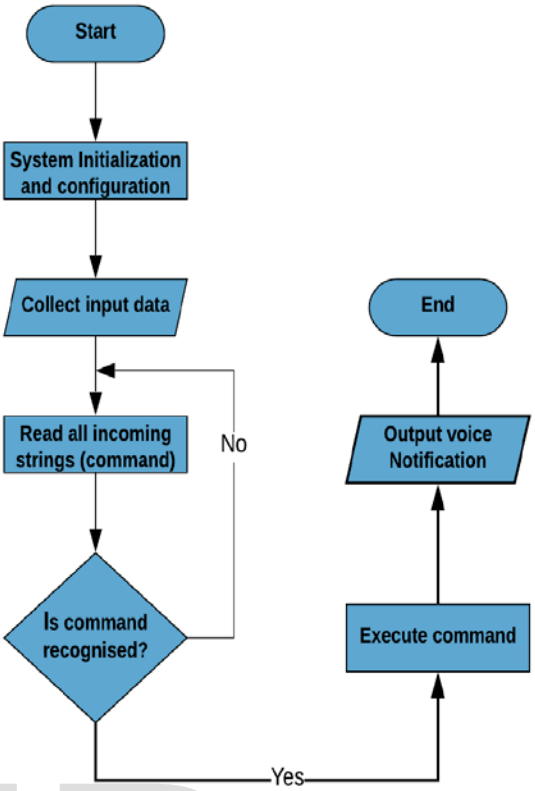


Figure 9: Control System flowchart

The control system circuit diagram drawn in Fritzing software is shown in figure 10.

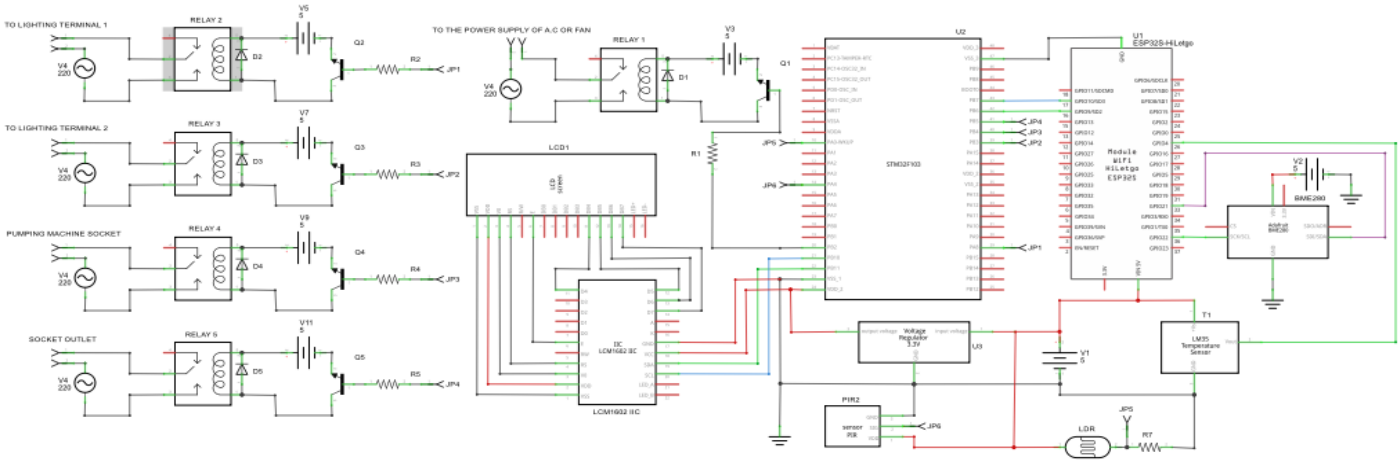

Figure 10: Control System Circuit Diagram of the Smart Home

### 3.2 General System Hardware Components

This section describes the overall hardware needed to implement the Knowledge Based Smart Home. The system is designed using Microcontrollers (i.e. Raspberry Pi, NodeMcu ESP32, NodeMcu ESP01, STM32 ARM Cortex), Sensors, actuators, Emic2 text to speech synthesizer module, speaker, LCD for displays, RFID module, LM35 centigrade sensor, LDR, PIR motion sensor, ultrasonic rangefinder, moisture sensor, camera, bridge rectifier diodes, 230Vac to 12Vac stepdown transformer, and wireless technology (HC-06 Bluetooth module, ESP8266 IoT development board, ESP8266 WI-FI module, SIM800L GSM module).

A. **Raspberry Pi 3 Model B** (figure 11a) is used in the security system section to process the video stream of any intruder captured by the camera and communicate to the ESP32 & STM 32 which finally send to the owner via GPS/GPRS module.

B. **NodeMcu ESP32** (figure 11b is a series of low-cost, low-power system on chip microcontrollers with integrated Wi-Fi and dual-mode Bluetooth. It is used in the security and control systems to receive various sensor signals, process and send to the STM 32 for activating the respective terminals.

C. **STM32 ARM Cortex** (figure 11c) is a microcontroller based on ARM Cortex-M 32-bit processor core that offers large number of serial and parallel communication peripherals which can be interfaced with all kinds of electronic components including sensors, displays, cameras, motors etc. It is used in security, control and communication systems to coordinate sensors signals and channel them where necessary.

D. **The ESP8266-01**(figure 11d) is a Wi-Fi module that allows microcontrollers access to a Wi-Fi network. It received signal from Ultrasonic finder and send to the ESP 32 for further processing

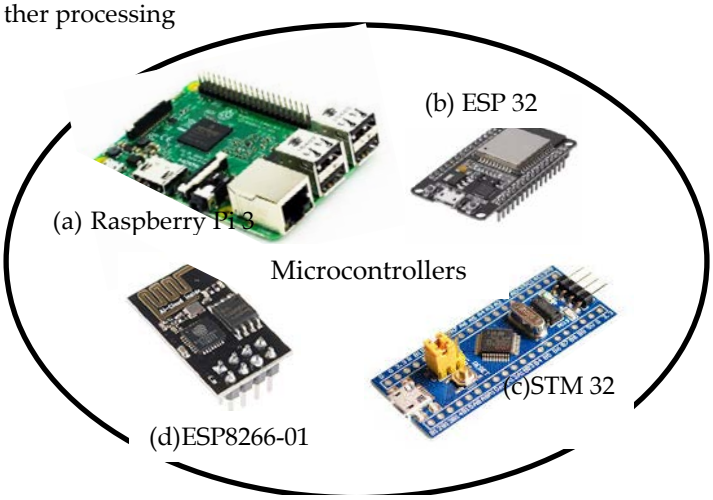


Figure 11: Microcontroller Family

**E. System Sensors**

Different sensors were used to implement the knowledge based smart home. In the security, control and communication systems sections, Camera (for capuring images), photoresistor sensor, LM35 temperature sensor, BME280 Environmental sensor (for temperature, pressure and humidity detections), PIR motion sensor (for motion detection), Gas-MQ2 sensor (for gas detection), ultrasonic rangefinder sensor (for obstacle detection) etc. are used as show in figure 12.

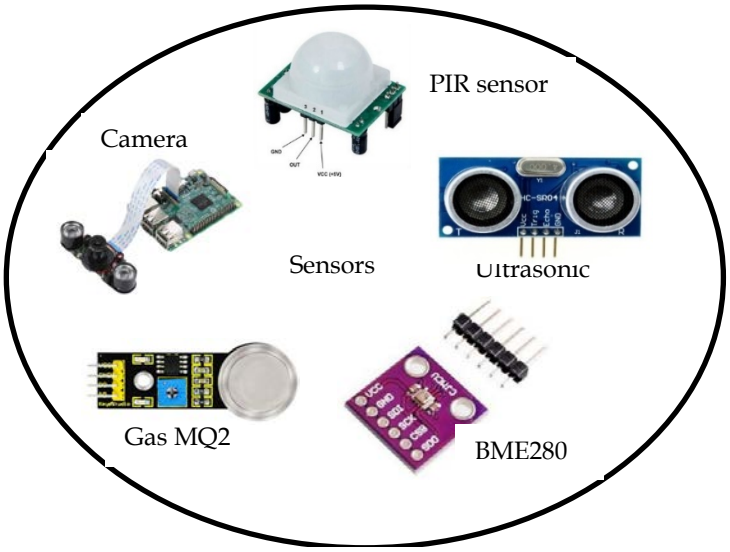


Figure 12: Different Sensors used to design the system

F. **Emic 2 Text-to-Speech Synthesizer module** (figure 13) The Emic 2 Text-to-Speech is a multi-language voice synthesizer that converts a stream of digital text into natural sounding speech. Using the universally recognized DECtalk text-to-speech synthesizer engine, Emic 2 provides speech synthesis capabilities for any embedded system via a simple command-based interface.

Figure 13: Emic 2 Text-to-Speech Synthesizer module

G. The SIM800L module (figure 14) supports quad-band GSM/GPRS network, available for GPRS and SMS message data remote transmission. The SIM800L communicates with microcontroller via UART port, supports command including 3GPP TS 27.007, 27.005 and SIMCOM enhanced AT Commands. It is used to send out signals to the home owner phone device or laptop device.

Figure 14: SIM800L GPS/GPRS Module

H. Actuators like Relay and Servo (figure 15) were used in the security and control systems. Relay helps in switching ON/OFF the light terminals and the sockets while servo assists camera to rotate both clockwise and anticlockwise.

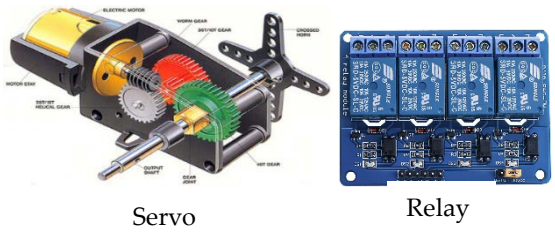


Figure 15: servo and Relay

I. **MFRC522 RFID Module** (figure 16) is a highly integrated reader/writer IC for contactless communication at 13.56MHz. The MFRC522 reader supports ISO/IEC 14443 A/MIFARE and NTAG. The MFRC522's internal transmitter is able to drive a reader/writer antenna designed to communicate with ISO/IEC 14443 A/MIFARE cards and transponders without additional active circuitry. It is used in the security system for user identification before granting access into the house.

Figure 16: MFRC522 RFID Module

J. **Liquid Crystal Display (LCD-16x2)** is used to display text (number & character) as shown in figure 17. It consists of an array of tiny segments (called pixels) that can be used to display information.

Figure 17: Liquid Crystal Display

K. **Power Supply components** (figure 18) like transformer, bridge rectifier diode, electrolytic capacitor, mica capacitor, resistor, LED, voltage regulators were used to capture +5V and +12V used in powering the system.

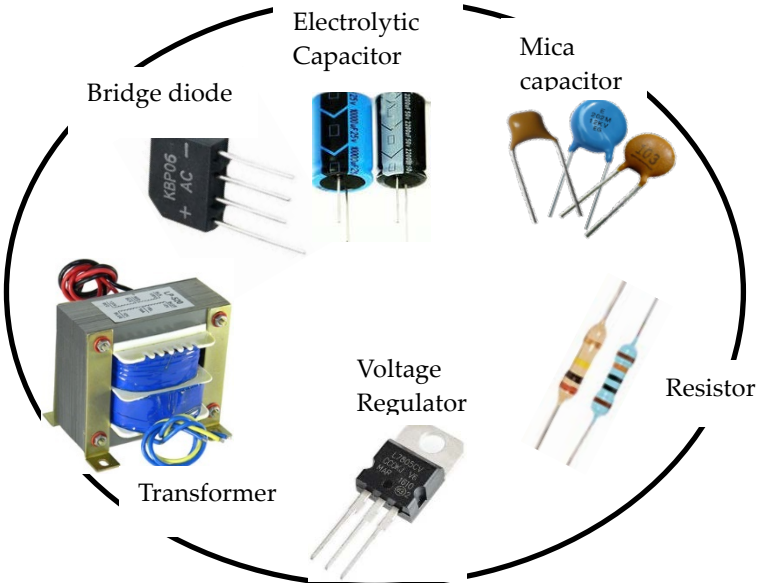


Figure 18: Power supply Components

### 3.3 System Software

The system software is divided into two separate modules namely Graphical User Interface (GUI) and Microcontroller Programming. Each of them includes languages used in the development and codes writing.

#### 3.3.1 Graphical User Interface (GUI)

The Graphical User Interface (GUI) is developed in Eclipse IDE using Java programming language (figure 19). The developed program would be installed in smart devices of the homeowners to enable them monitor, control and manage home property effectively. The web platform development was done using Bracket IDE (figure 20)

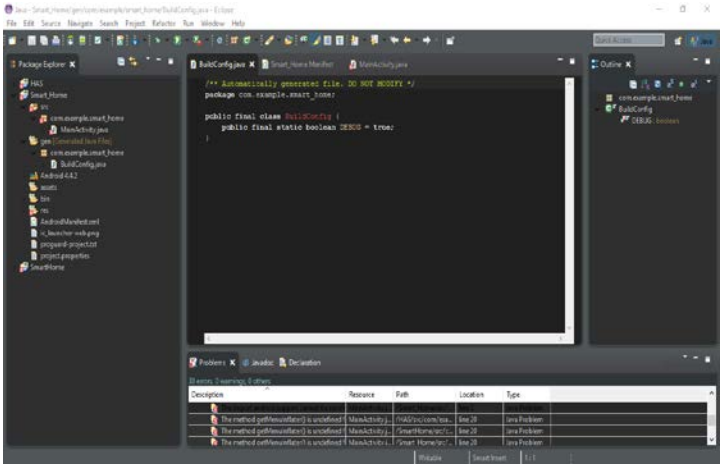

Figure 19: Eclipse IDE for Smart Phone GUI Development

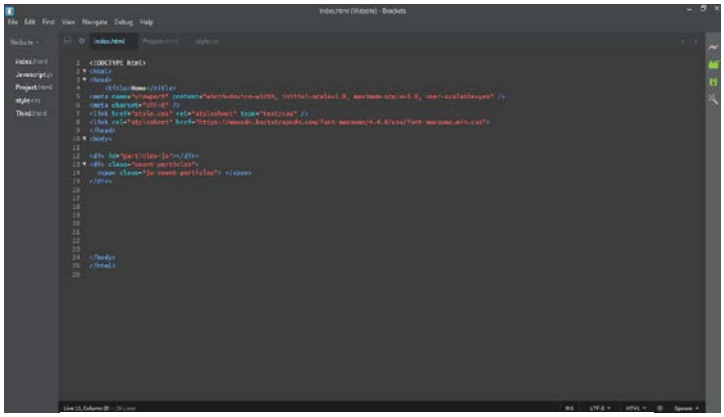

Figure 20: Bracket IDE for Web Development

These two IDEs (Eclipse and Brackets) put together played very important role during the software development process.

### 3.3.2 Microcontroller Programming

The Microcontrollers codes were written in Arduino IDE since it is compatible with STM32, ESP32 and ESP8266-01 microcontrollers using C++ programming language (figure 21). The Raspberry Pi 3 was programmed using Python language. The Python is pre-installed in the Raspbian operating system by the manufacturer to be used by the programmer.


Figure 21: Arduino IDE using C++ Programming Language

### 3.3.3 Android Web Application Development

The Massachusetts Institute of Technology (MIT) App Inventor is an intuitive, visual programming environment that allows everyone to build fully functional apps for smartphones and tablets. The Andriod phone web application is developed as shown in figure 22.

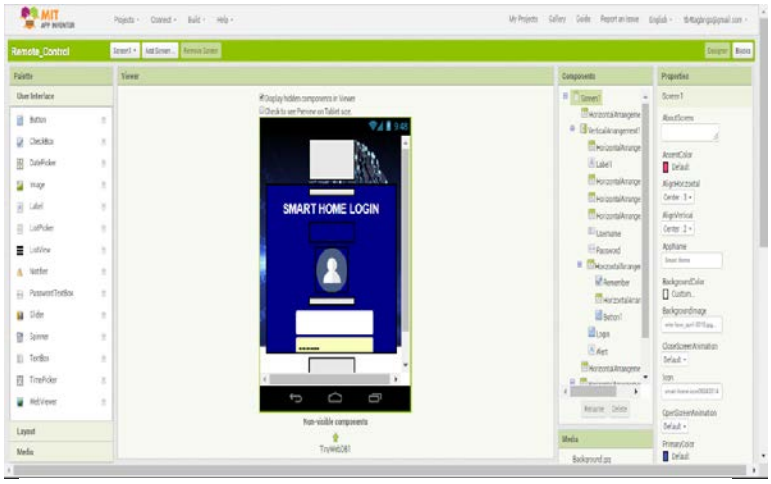


Figure 22: Android web application development IDE

## 4 SYSTEM TESTING, RESULTS & PACKAGING

The hardware parts of each section is assembled and tested. The sections considered are the home security system, communication system and control system of the work.

### 4.1 Home Secuirty System Test

The Gas Sensor MQ2, photoresistor, LM35 temperature sensor, PIR motion sensor, STM32 ARM cortex, ESP32 (WiFi & Bluetooth), SIM800L GSM/GPRS module, Alarm system, Raspberry PI 3, LCD module, Power supply etc. were connected and tested as shown in figure 23.

Figure 23: Assembled Home security system

### 4.2 Communication System Test

The sensors, Voice recognition, STM32 ARM cortex, ESP32 (WiFi & Bluetooth), SIM800L GSM/GPRS module, speakers with amplifers, power supply etc. were connected and tested, which can communicate with the Graphical User interface installed in the operator's smart phone as shown in figure 24.

Figure 24: Assembled Home communication system

### 4.3 Control System Test

The smart water level transmitter, automatic changeover switch transmitter, the terminals outlets, sensors, STM32 ARM cortex, ESP32 (WiFi & Bluetooth) etc.were connected and tested as shown in figure 25

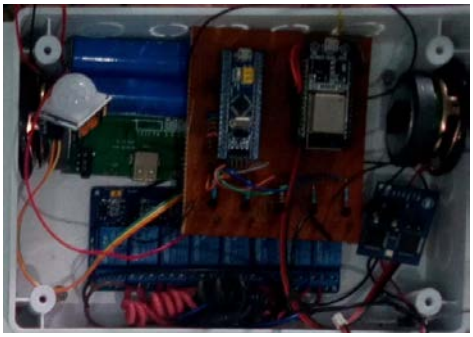

Figure 25: Assembled Home control system

### 4.3 Android Web Application Test

The Android Emulator simulates Android devices on the computer for the applications to be tested on a variety of devices and Android API levels without having each physical device. During the development of the web application (figure 26), live testing was conducted using the android emulator on computer windows device. Also, the editor was checked for error warnings before compiling and building the program into the .apk (Android Package) file which is the package file format used by Android operating system for distribution and installation of mobile applications and middleware. Later transferred the application to Android device installed and launched it.

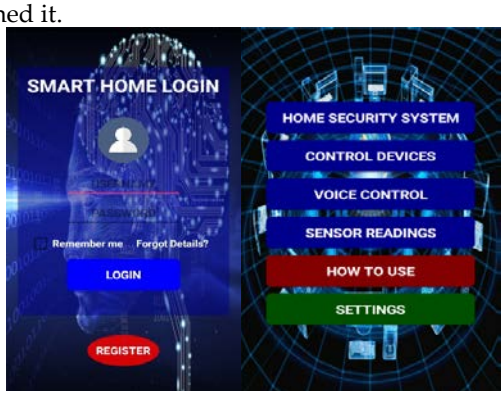


Figure 26: Android web Application platform

## 5 SYSTEM PACKAGING

After testing various systems that made up of the Smart Home, all were integrated and packaged as shown in figure 27


Figure 27: Knowledge based Smart Home system

## 6 Conclusion

The knowledge Based Smart home provides a centralized control over the home appliances with the addition of low-cost devices and an intelligent system. This system can also function as an intelligent personal assistant (IPA), thus answering query and performing actions via voice commands using a natural language user interface. Using Natural Language Processing, the user's request is executed and acknowledged by the Intelligent System. The developed system does not only monitor the sensor data, like temperature, gas, light, motion sensors, but also actuates a process according to the requirement, for example switching on the light when it gets dark, triggering an alarm when it senses an intruder, send notification messages to alert the user etc. It also sends the sensor parameters to the cloud in a timely manner. This would assist the user to analyze the condition of various parameters in the home anytime anywhere.

## Acknowledgment

The authors give thanks to God Almighty for His grace throughout this paper. We say thank you to IJSER editors, for your humble commitment and prompt response in attending to Journal papers any time. Special thanks to our families for all their moral support and encouragement.

## References

[1] Surinder, K., Rashmi, S., Neha, K., & Pratyk J. "Advanced Computational Intelligence: *Home automation and security"*, 3(2), 17 – 23. (2016). http://aircconline.com/acii/V3N3/3316acii03.pdf

[2] Drew,H."The History of Smart homes" (2014). http://www.iotevolutionworld.com/m2m/articles/376816-history-smart- homes.htm,.

[3] King, L. "The Evolution of the Smart Home" (2015).https://www.raconteur.net/technology/the-evolution-of-the-smart-home

[4] Olson, D., Leadley, J., & Morse, S. "The Emergence of Artificial Intelligence in the Home: Products, Services, and Broader Developments of Consumer" Oriented AI. Accessed July 25th, 2018, https://digitalcommons.wou.edu/cgi/viewcontent.cgi?article=1001&context= computerscience_studentpubs

[5] Sylvestre, S. S. "Raspberry Pi Security Based System", (2016). http://eie.uonbi.ac.ke/sites/default/files/cae/engineering/eie/RASPBERRY%20PI%20BASED%20SECURITY%20SYSTEM.pdf

[6] Baig, I., Muzamil, C. & Dalvi, S. "Home Automation Using Arduino Wi-Fi Module" (2015). https://core.ac.uk/download/pdf/55305294.pdf

[7] Rahman, R. B. "Automatic Water Level Control" (2009). http://eprints.utem.edu.my/4799/1/Automatic_Water_Level_Control_Rahay u_Abd_Rahman_TJ213.R39_2009_24.pdf

[8] Ahmed, E. Karim, A. H. "Design and Implementation of a Wi-Fi Based Home Automation System", World Academy of Science, Engineering and Technology International Journal of Computer and Information Engineering (2012), 6(2). https://waset.org/publications/5037/design-and-i mplementation-of-a-wifi-based-home-automation-system.

[9] Wuey, M. K. "Intelligent Home Automation System" (2011). http://eprints.utar.edu.my/119/1/EC-2011-0704883-1.pdf

[10] Sirisilla, M. & Mahesh K. D." Mobile Computing: *E-mail Interactive Home Automation System"*, International Journal of Computer Science (2015). 4(7), 78-87 https://www.ijcsmc.com/docs/papers/July2015/V4I7201517.pdf

[11] Garima, T., Melnita, D., Lyzanne, D., & Fernandes, T., "*Home Automation System using Artificial Intelligence"*, International Journal for Research in Applied Science & Engineering Technology:2017, 5(8).https://www.ijraset.com/fileserve.php?FID=9144

[12] Aishwarya L., Ashwini K., Akhila L., Aneela & Lorate S. *"Industrial Automation Using Internet of Things (IOT)"*, International Journal of Computer Engineering and Applications: 2018. http://www.ijcea.com/wp- content/uploads/2018/05/18.INDUSTRIAL-AUTOAMTION-USING-INTERNET-OF-THINGS-IOT.pdf

[13] Binti, A. N. "Smart Home Security Using RFID" (2014). http://eprints.utem.edu.my/16257/1/Smart%20Home%20Security%20Using %20RFID%20System%2024%20Pages.pdf

[14] Mark Z. "Artificial Intelligence for the Smart Home" by Communications Department (2017). . https://asgroup.net.au/artificial-intelligence-for-the-smart-home-by-mark-zuckerberg/

[15] Piyare, R., Tazil, M. "*Bluetooth based home automation system using cell phone*", International Symposium on Consumer Electronics (2011 https://www.researchgate.net/publication/231182479_Bluetooth_based_hom e_automation_system_using_cell_phone

[16] Jaya, S.D. and Lakshmi, J. M. "*Android Mobile Based Home Automation Using Bluetooth*", International Journal of Advanced Research in Computer Engineering & Technology:(2014), 3(9). http://ijarcet.org/wp- content/uploads/IJARCET-VOL-3-ISSUE-9-3208-3215.pdf